31 years quality keep consistent

Specification

Customer name: Good Solutions Sweden AB

Product name: Split core current transformer

Manufacturer model: SCT045B-

Customer No.:

Characteristics:

1. Mounting type: plate-type
2. Material of core: Silicon steel sheet
3. Operating temperature:-20℃～+60℃
4. Storage temperature:-25℃～+65℃
5. Dielectric strength: 3500V AC/1min 5mA(secondary/shell)

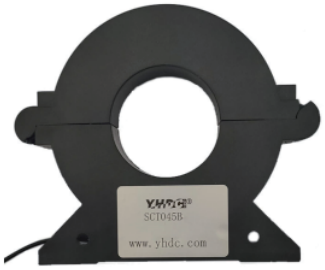

Product picture: (printing for reference only, subject to the actual)

Outline size: (in:mm±0.5)

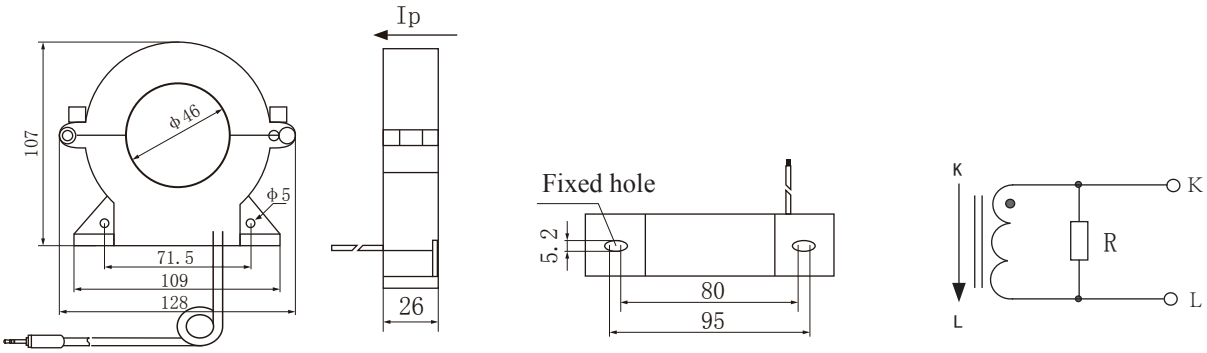

Front view | Side view | Bottom view | Voltage output type Connection diagram

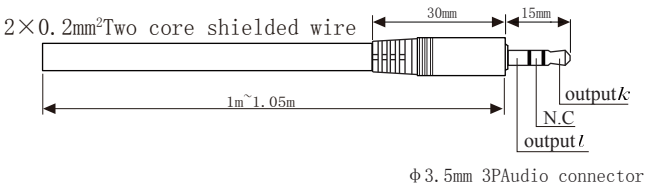

Basic technical parameter table：

Input current	Output voltage	Accuracy	Work frequency	Weight
600A AC	1V AC	1%	50Hz-60Hz	409g

Noted: 2×0.2mm² Two core shielding wire,100cm-105cm in length. With 3.5mm audio plug.

Voltage output type secondary does not allow short circuit.

The above parameters are all typical values, and the actual value is subject to the actual measurement of the product.

When user confirmed the parameters please sign it, the specification will be executed as an appendix of contract.

Customer sign: David Lyckelid

Approvaled by:

Web:www.poweruc.pl

Date: November 29, 2023